REF: 11126-4
ISSUE: 1

TECHNICAL REPORT ON

CURRENT TRANSFORMER TESTS AT GASCOIGNE WOOD SUB STATION

EX WISTOW CIRCUIT

By

CHRIS CAPEL

Addressee:

DAVID POLLIN

NORTHERN POWERGRID

Registered in England & Wales 4405148
Registered Office, 5 New Street Square, London EC4A 3TW

JOB INFORMATION

REPORT REFERENCE	11126-4 ISSUE 1
CUSTOMER	NORTHERN POWERGRID
SITE	GASCOINGNE WOOD
JOB DESCRIPTION	CURRENT TRANSFORMER TEST
TEST ENGINEERS	CHRIS CAPEL, STEFAN DRAGOSTINOV
TEST DATE	28TH NOVEMBER 2017
REPORT PREPARED BY	CHRIS CAPEL
DATE	13TH DECEMBER 2017
REPORT AUTHORISED BY	STEFAN DRAGOSTINOV
DATE	18TH DECEMBER 2017

TABLE OF CONTENTS

JOB INFORMATION 2

INTRODUCTION 4

CONCLUSIONS 4

RESULTS 4

TEST RESULTS AND FIGURES 5

CIRCULATION 16

INTRODUCTION

The following report documents the tests performed on two measurement CT's associated with the EX-Wistow circuit at the Gascoigne Wood Sub-Station. The purpose of the testing was to assess the units for suitability for metering purposes and determine the accuracy.

The CT's were tested using the CT analyser and tested within the switchgear Figure 2 shows the test circuit.

The following tests were performed to assess the condition of the CT's in accordance with IEC 60044-1

- Class
- Resistance
- Ratio
- Excitation

Calibration data for the test equipment used is listed in Table 1.

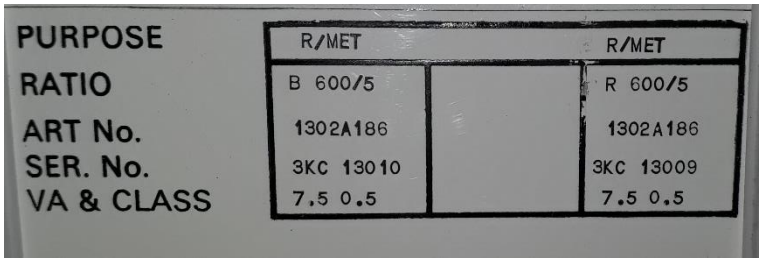

Figure 1. CT Rating Plate.

CONCLUSIONS

The results obtained confirm that the metering CT's connected to the Osgodby circuit meet specification for metering class of current transformer in accordance with IEC 60044-1.

RESULTS

Results from the tests carried out are given in the following section. No further action is required for both CT's tested.

TEST RESULTS AND FIGURES

TEST EQUIPMENT			
Test conducted	Equipment used	Serial no	Calibration due
CT Analyser	Omicron CT Analyser	LF643J	28th Feb 2018

Table 1

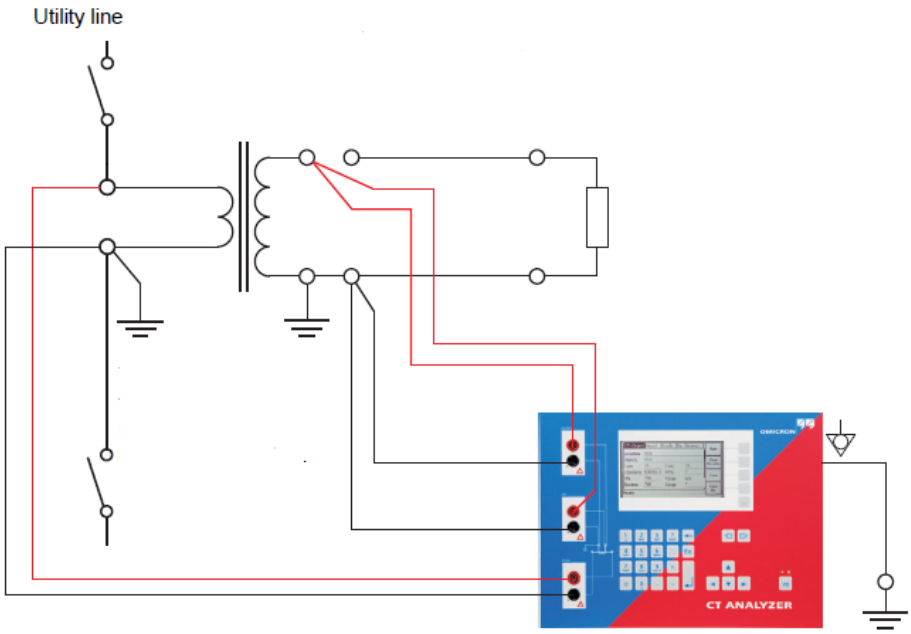

Figure 1. Test Circuit

Test Report 1 Ex Wiston Red Phase CT

Date/Time: 2017-11-28, 17:37:49

Assessment	Auto	Manual
	Passed	

Location

Company:	Doble/NPG	**Country:**	UK
Station:	Gascoigne Wood	**Feeder:**	EX Wistow
Phase:	RED	**IEC-ID:**	

CT Nameplate

Manufacturer:		**Tap:**	
Type:		**Core Number:**	
Serial Number:	3KC 13009	**Optional 1:**	
Ratio:	600:5	**Core Type:**	Metering CT
Frequency:	50Hz	**Class:**	0.5 - FS 0 ext. 120% (IEC 60044-1)
Nominal Burden:	7.5 VA	**Operating Burden:**	7.5 VA

Comment

Ex Wiston CT

Equipment

Test Device:	CT-Analyzer	**Software Version:**	4.40 (14-06-24 09:36)
Serial Number:	LF643J	**Hardware Version:**	01/01/08/05/00/11

Test Settings:

Primary Current I-pn:	600.0A	**Nominal Burden:**	7.5VA cos φ: 0.8
Secondary Current I-sn:	5.0A	**Operating Burden:**	7.5VA [?] cos φ: 0.8 [?]
Frequency:	50.0Hz		
Applied Standard:	IEC 60044-1	**Core Type:**	Metering CT
Class:	0.5 - FS 0 ext. 120%		
Rct:	0.216Ω [?] (75.0°C)		
FS:	2.0[?]	**Ext. I-pn:**	120%
		Ext. VA:	no

Multiplying Factor for Ratio Assessment: 1.000
Delta compensation: Ratio 1

[?] Value is automatically detected by CT Analyzer's guesser function.
[*] Auto-detection may prevent assessment. Explicit setting might be mandatory for automatic assessment.

Assessments:

Parameter	Auto	Manual
Class	Passed	
...ε	Passed	
...Δφ	Passed	
FS	n/a	
FSi	n/a	

Resistance

Secondary Winding:

R-meas:	181.2mΩ	**T-meas:**	25.0°C
R-ref:	216.1mΩ	**T-ref:**	75.0°C

Ratio:

Results with nominal burden:

Used Burden:	7.5 VA cos φ: 0.8
Used I-p:	600.00A
Ratio:	600.0 : 4.9865
Deviation:	-0.269%
ε-c:	0.288%
RCF:	1.00270
N:	120.03
Phase:	1.59min
Polarity:	OK

Burden	**Current ratio error in % at % of rated current**								**Designation**
VA / cos φ	**1.0 %**	**5.0 %**	**10 %**	**20 %**	**50 %**	**100 %**	**120 %**	**200 %**	
7.50 / 0.8	-0.361	-0.346	-0.332	-0.313	-0.278	-0.269	-0.277	! -0.348	100% Nom.Burden
3.75 / 1.0	-0.115	-0.132	-0.141	-0.149	-0.155	-0.153	-0.152	-0.148	50% Nom.Burden
1.875 / 1.0	-0.086	-0.097	-0.103	-0.109	-0.115	-0.116	-0.115	-0.114	25% Nom.Burden
1.00 / 1.0	-0.073	-0.081	-0.086	-0.091	-0.096	-0.097	-0.097	-0.096	1 VA

Burden	**Phase displacement in minutes at % of rated current**								**Designation**
VA / cos φ	**1.0 %**	**5.0 %**	**10 %**	**20 %**	**50 %**	**100 %**	**120 %**	**200 %**	
7.50 / 0.8	11.43	8.24	6.42	4.46	1.91	1.59	2.34	! 10.44	100% Nom.Burden
3.75 / 1.0	10.52	8.83	7.74	6.47	4.64	3.42	3.17	4.33	50% Nom.Burden
1.875 / 1.0	7.59	6.59	5.88	5.04	3.78	2.80	2.57	2.36	25% Nom.Burden
1.00 / 1.0	6.19	5.48	4.94	4.29	3.30	2.51	2.30	1.85	1 VA

NOTE: Measurements with '!' have reduced accuracy. Accuracy only guaranteed on non-gapped cores.

Excitation:

Knee Points:

Standard	V	I
IEC 60044-1	3.542V	30.46mA

Results:

Kr: 52%

Lm: 584.1mH
Ls: 377.6µH

Results with nominal burden:		Results with operating burden:	
Burden:	7.5 VA cos φ: 0.8	**Burden:**	7.5 VA cos φ: 0.8
FS:	n/a	**FS:**	n/a
FSi:	1.88	**FSi:**	1.88
Ts:	1.281s	**Ts:**	1.281s
ε-i:	n/a (@ FS = -1.0)	**ε-i:**	n/a (@ FS = -1.0)

Excitation Table:

Actual Values		
V	**I**	**L**
4.611V	1.712A	2.3mH
4.601V	344.2mA	17.7mH
4.584V	284.3mA	21.8mH
4.563V	230.7mA	28.8mH
4.394V	111.0mA	73.4mH
4.206V	72.90mA	119.7mH
4.014V	53.31mA	168.4mH
3.818V	41.07mA	222.3mH
3.616V	32.69mA	281.9mH
3.411V	26.76mA	345.3mH
3.202V	22.40mA	414.2mH
2.993V	19.23mA	481.5mH
2.783V	17.09mA	543.5mH
1.665V	9.236mA	584.1mH
1.001V	6.100mA	518.4mH
0.596V	4.063mA	463.2mH
0.355V	2.669mA	421.7mH
0.213V	1.741mA	386.7mH
0.127V	1.125mA	357.2mH
0.076V	721.0µA	333.3mH
0.046V	456.3µA	315.7mH
0.027V	285.8µA	302.0mH
0.016V	176.8µA	292.4mH

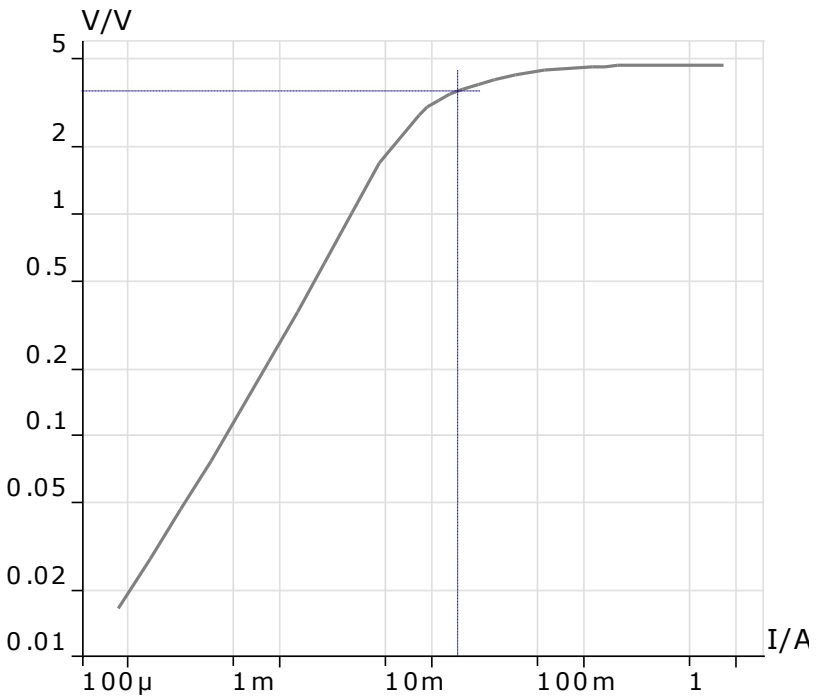

Test Report 2 Ex Wistow Blue Phase CT

Date/Time: 2017-11-28, 17:43:09

Assessment	Auto	Manual
	Passed	

Location

Company:	Doble/NPG	**Country:**	UK
Station:	Gascoigne Wood	**Feeder:**	EX Wistow
Phase:	Blue	**IEC-ID:**	

CT Nameplate

Manufacturer:		**Tap:**	
Type:		**Core Number:**	
Serial Number:	3KC 13010	**Optional 1:**	
Ratio:	600:5	**Core Type:**	Metering CT
Frequency:	50Hz	**Class:**	0.5 - FS 2 ext. 120% (IEC 60044-1)
Nominal Burden:	7.5 VA	**Operating Burden:**	7.5 VA

Comment

Ex Wiston CT

Equipment

Test Device:	CT-Analyzer	**Software Version:**	4.40 (14-06-24 09:36)
Serial Number:	LF643J	**Hardware Version:**	01/01/08/05/00/11

Test Settings:

Primary Current I-pn:	600.0A	**Nominal Burden:**	7.5VA cos φ: 0.8
Secondary Current I-sn:	5.0A	**Operating Burden:**	7.5VA [?] cos φ: 0.8 [?]
Frequency:	50.0Hz		
Applied Standard:	IEC 60044-1	**Core Type:**	Metering CT
Class:	0.5 - FS 2 ext. 120%		
Rct:	0.324Ω [?] (75.0°C)		
FS:	2.0[?]	**Ext. I-pn:**	120%
		Ext. VA:	no

Multiplying Factor for Ratio Assessment: 1.000
Delta compensation: Ratio 1

[?] Value is automatically detected by CT Analyzer's guesser function.
[*] Auto-detection may prevent assessment. Explicit setting might be mandatory for automatic assessment.

Assessments:

Parameter	Auto	Manual
Class	Passed	
...ε	Passed	
...Δφ	Passed	
FS	Passed	
FSi	Passed	

Resistance

Secondary Winding:

R-meas:	271.4mΩ	**T-meas:**	25.0°C
R-ref:	323.7mΩ	**T-ref:**	75.0°C

Ratio:

Results with nominal burden:

Used Burden:	7.5 VA cos φ: 0.8
Used I-p:	600.00A
Ratio:	600.0 : 4.983
Deviation:	-0.340%
ε-c:	0.506%
RCF:	1.00341
N:	119.93
Phase:	9.03min
Polarity:	OK

Burden	**Current ratio error in % at % of rated current**								**Designation**
VA / cos φ	**1.0 %**	**5.0 %**	**10 %**	**20 %**	**50 %**	**100 %**	**120 %**	**200 %**	
7.50 / 0.8	-0.413	-0.391	-0.377	-0.356	-0.316	-0.340	! -0.341	n/a	100% Nom.Burden
3.75 / 1.0	-0.129	-0.160	-0.174	-0.187	-0.187	-0.181	-0.173	! -0.105	50% Nom.Burden
1.875 / 1.0	-0.092	-0.118	-0.129	-0.140	-0.144	-0.137	-0.138	! -0.091	25% Nom.Burden
1.00 / 1.0	-0.075	-0.098	-0.109	-0.118	-0.125	-0.118	-0.118	! -0.084	1 VA

Burden	**Phase displacement in minutes at % of rated current**								**Designation**
VA / cos φ	**1.0 %**	**5.0 %**	**10 %**	**20 %**	**50 %**	**100 %**	**120 %**	**200 %**	
7.50 / 0.8	20.55	14.15	10.96	7.57	4.49	9.03	! 13.86	n/a	100% Nom.Burden
3.75 / 1.0	19.97	15.23	12.85	10.20	6.93	7.65	9.43	! 29.20	50% Nom.Burden
1.875 / 1.0	16.80	13.04	11.13	9.03	6.17	5.20	6.20	! 13.08	25% Nom.Burden
1.00 / 1.0	15.29	11.96	10.28	8.43	5.81	4.78	4.92	! 9.32	1 VA

NOTE: Measurements with '!' have reduced accuracy. Accuracy only guaranteed on non-gapped cores.

Excitation:

Knee Points:

Standard	V	I
IEC 60044-1	3.621V	50.78mA

Results:

Kr: 44%

Lm: 492.3mH
Ls: 9.1mH

Results with nominal burden:		Results with operating burden:	
Burden:	7.5 VA cos φ: 0.8	**Burden:**	7.5 VA cos φ: 0.8
FS:	>1.60	**FS:**	>1.60
FSi:	1.55	**FSi:**	1.55
Ts:	0.8734s	**Ts:**	0.8734s
ε-i:	>23.74% (@ FS = 2.0)	**ε-i:**	>23.74% (@ FS = 2.0)

Excitation Table:

Actual Values		
V	**I**	**L**
4.646V	1.860A	2.3mH
4.488V	163.8mA	55.1mH
4.286V	113.8mA	81.4mH
4.098V	87.51mA	106.7mH
3.907V	69.32mA	133.7mH
3.714V	55.85mA	163.1mH
3.518V	45.54mA	196.2mH
3.319V	37.52mA	232.8mH
3.119V	31.23mA	273.1mH
2.896V	26.15mA	323.0mH
1.782V	12.33mA	492.3mH
1.002V	7.490mA	428.4mH
0.673V	5.530mA	388.0mH
0.412V	3.772mA	349.0mH
0.254V	2.555mA	315.8mH
0.156V	1.713mA	289.8mH
0.096V	1.141mA	267.4mH
0.059V	753.2µA	248.1mH
0.036V	494.3µA	232.8mH
0.022V	322.3µA	219.8mH
0.014V	207.8µA	209.8mH

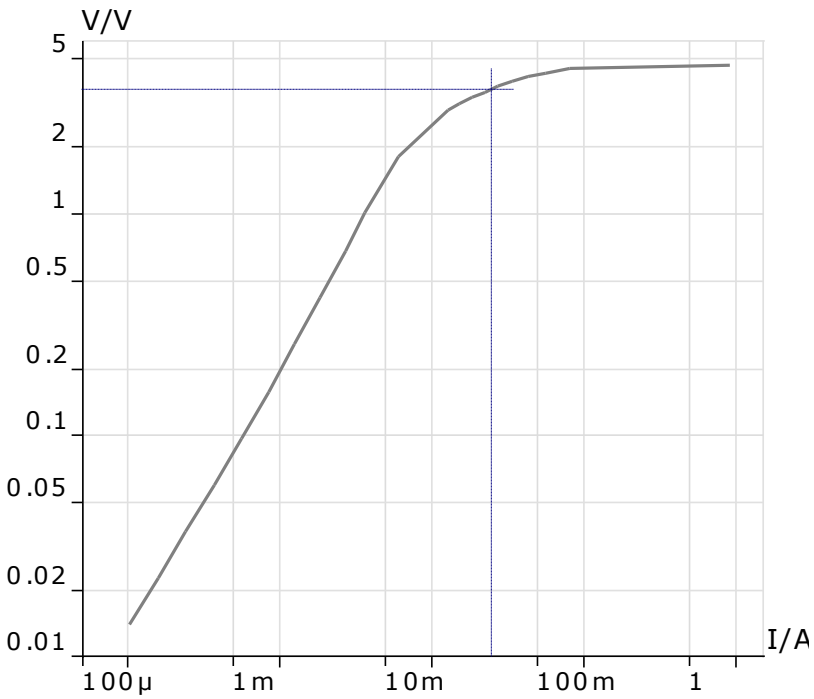

CIRCULATION

Doble PowerTest UK
Richard Heywood (File)
Stefan Dragostinov

Northern Power Grid
David Pollin

Copyright 2017 © Doble PowerTest

All rights reserved. No part of this publication may be produced, stored in a retrieval system, or transmitted in any form by any means, electronic, mechanical, photocopying, recording or otherwise, without the prior written permission of Doble.

Indemnity

This document may not be distributed or used outside the client for whom it is prepared, except with written authorisation from Doble. Doble disclaims all liability for any loss, damage, injury or other consequence whatsoever arising from any unauthorised use howsoever caused, including any such resulting from error, omission or negligence in its application.