TOOL-LESS ACCESS

NXT LITE

UTILITY FRIENDLY DESIGN

LIMITED 10 YR WARRANTY

PERFORMANCE, RELIABILITY, & VALUE

The NXT-Lite incorporates the same award-winning performance and reliability features that utilities and municipalities have come to expect at a competitive price. The NXT-Lite is a utility-friendly luminaire designed for residential roadway applications requiring up to a 100W high pressure sodium replacement.

NXT-Lite features a tool-less, replaceable light engine and power supply (door-mounted). It is available with two (1-10V dimming) drive current options as well as a DALI driver option. Color temperatures offered are 4000K (standard) or 3000K. Other features include a 7-pin ANSI C136.41 receptacle, 2 or 4-bolt fitter, an optional house-side shield, and a post-top mounting bracket.

NXT LITE

UPGRADEABLE LIGHT ENGINE
Unplug the cable connector and release the light engine using the snap latches.

DOOR HINGES
Release the removable door by sliding the door pins out of the hinge slots.

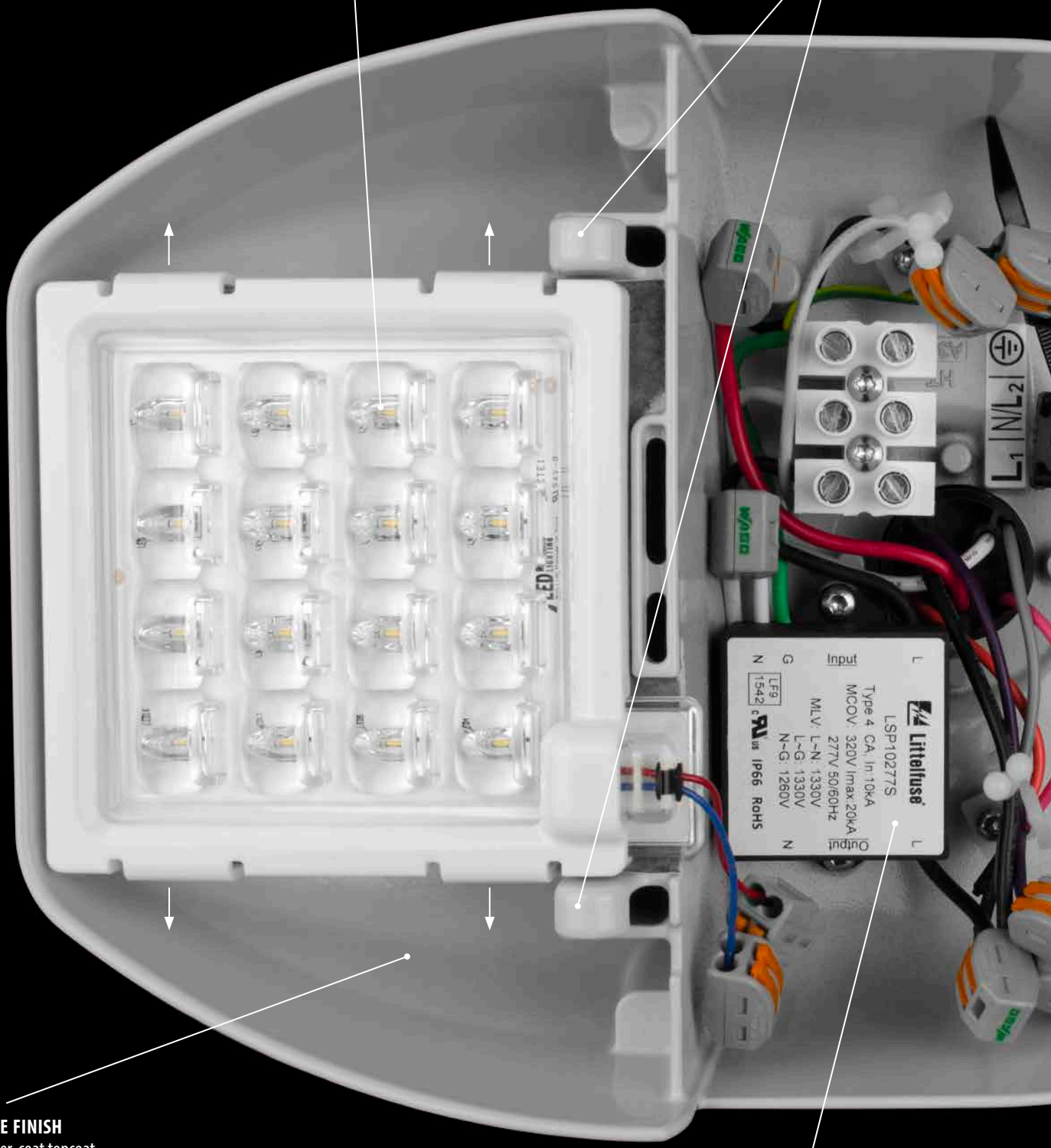

DURABLE FINISH
Polyester powder-coat topcoat.

SURGE MODULE
Surge module which meets the requirements of ANSI Extreme (20kV/10kA).

SERIES	# OF LEDS	DRIVE CURRENT	COLOR TEMPERATURE (CCT)
NXT-LITE	16	700 & 1050 mA	4000K (Standard) & 3000K (Optional)

* PLEASE REFER TO SPECIFICATION SHEETS FOR DETAILED PERFORMANCE DATA

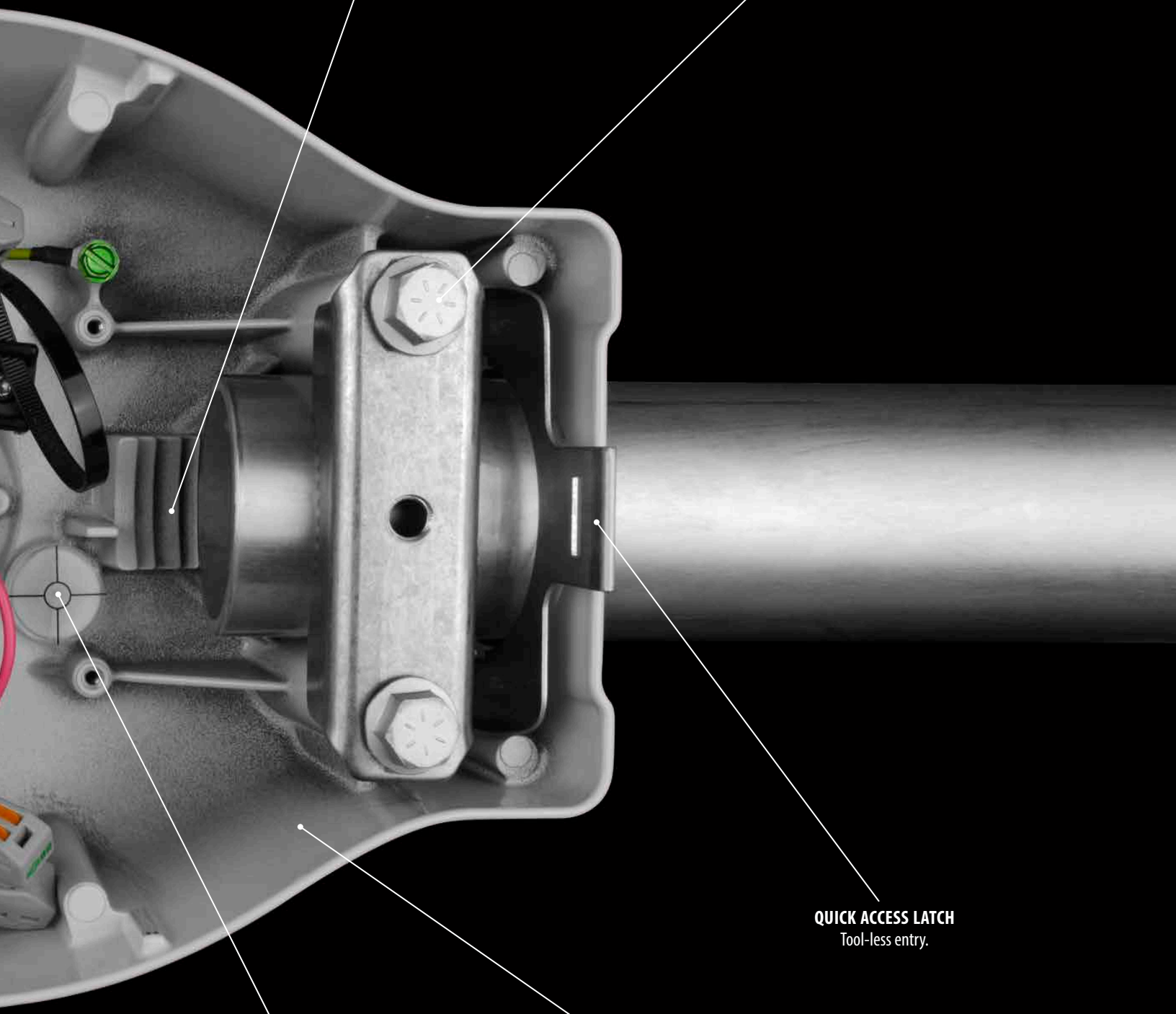
INTEGRATED MOUNTING STEP
Built-in steps with 2.5° increments allow for simple tilt adjustment up to ± 5°.
MOUNTING OPTIONS
2-bolt fitter (standard) & 4-bolt fitter (optional)
1.625″ - 2.375″ (42 - 60 mm) O.D. Tenons
Post-top mount option available.
QUICK ACCESS LATCH
Tool-less entry.
BUBBLE LEVEL
(Optional)
ALUMINUM BODY
Single-piece, die-cast A360 aluminum.

DOOR-MOUNTED POWER SUPPLY
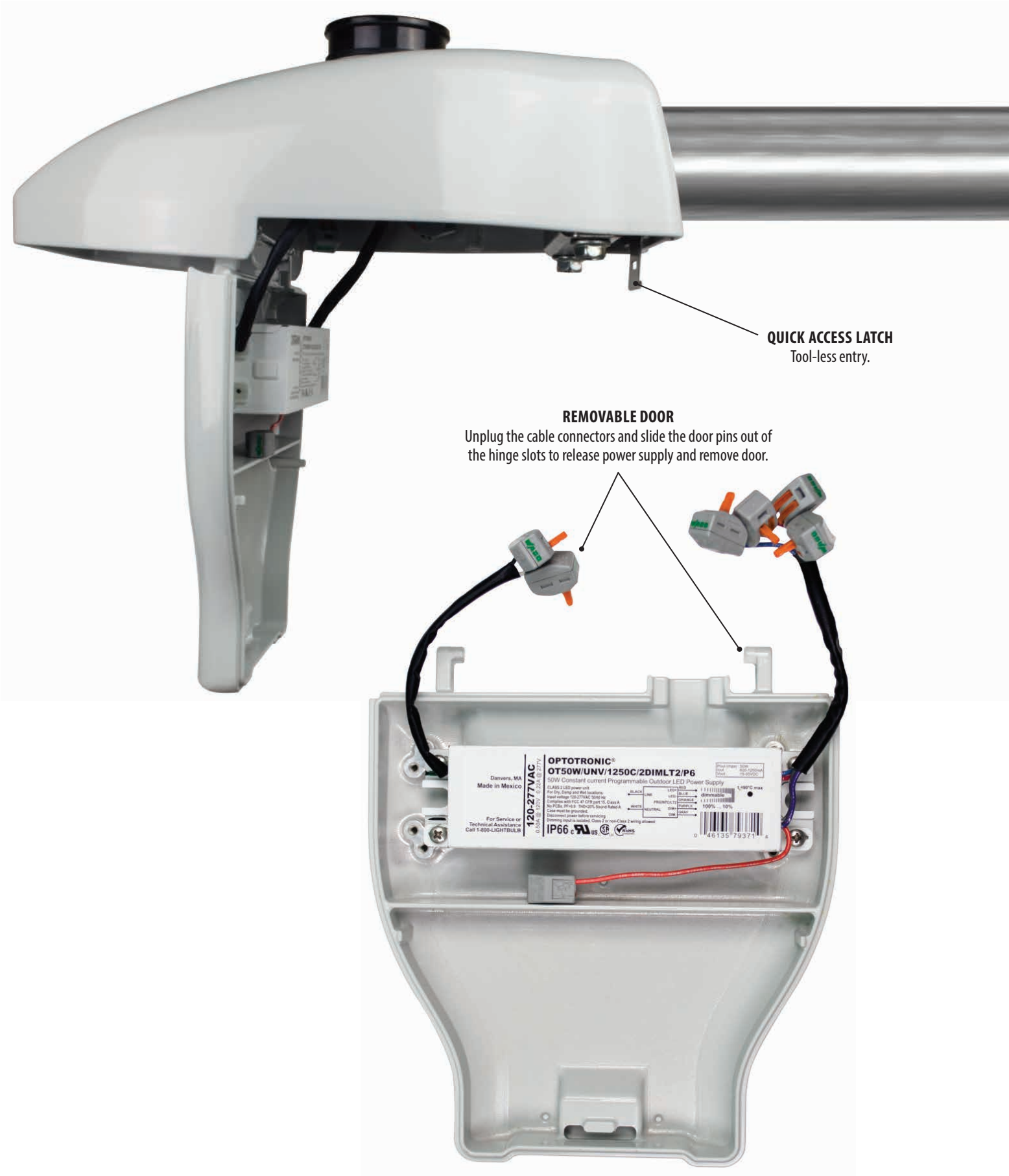
NXT LITE